WIRE SIZE	MAX INSULATION	"A" ±.012 / ±0.30	"C" ±.012 / ±0.30	"D" ±.005 / ±0.13	"E" ±.012 / ±0.30	"G" ±.005 / ±0.13	"H" ±.012 / ±0.30
20-24	.073/1.85	.091/2.31	.099/2.51	.030/0.76 R.	.075/1.91	.025/0.64 R.	.082/2.08
26-30	.050/1.27	.075/1.91	.083/2.10	.025/0.64 R.	.058/1.47	.020/0.51 R.	.065/1.65
18 OR 0.75mm²	.073/1.85	.091/2.31	.099/2.51	.030/0.76 R.	.086/2.18	.029/0.74 R.	.094/2.39

MATERIAL NUMBER	PLATING	WIRE SIZE (AWG)	FORM
43030-0001	A	20-24	CHAIN
43030-0002	B	20-24	CHAIN
43030-0003	C	20-24	CHAIN
43030-0004	A	26-30	CHAIN
43030-0005	B	26-30	CHAIN
43030-0006	C	26-30	CHAIN
43030-0007	A	20-24	LOOSE
43030-0008	B	20-24	LOOSE
43030-0009	C	20-24	LOOSE
43030-0010	A	26-30	LOOSE
43030-0011	B	26-30	LOOSE
43030-0012	C	26-30	LOOSE
43030-0038	A	18 OR 0.75mm² (SEE NOTE 10)	CHAIN
43030-0039	B	18 OR 0.75mm² (SEE NOTE 10)	CHAIN
43030-0040	C	18 OR 0.75mm² (SEE NOTE 10)	CHAIN

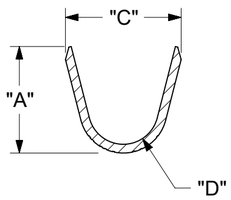

SECTION W-W

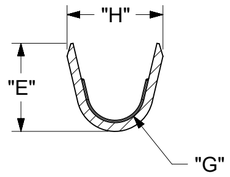

SECTION V-V

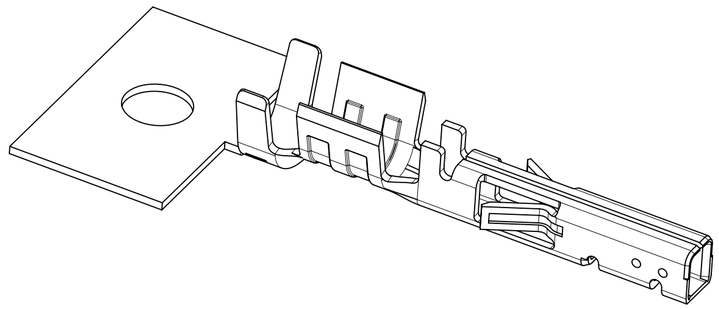

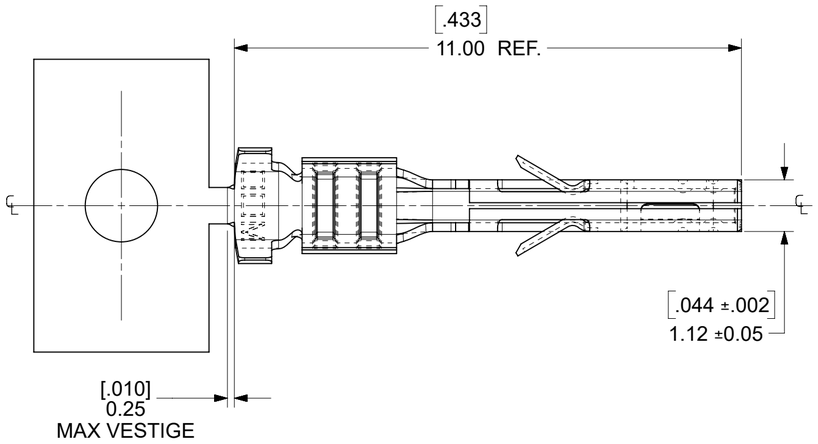

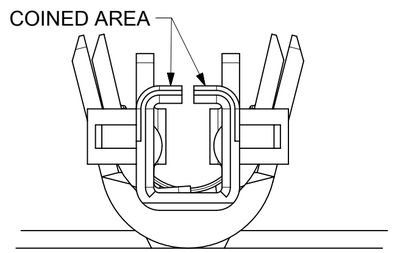

SCALE 20:1

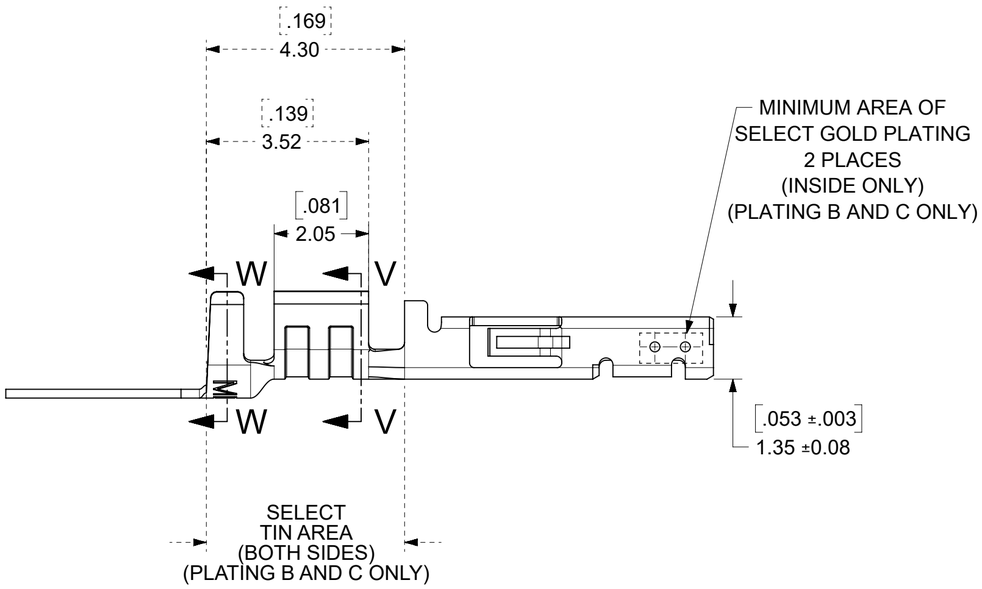

NOTES

1) MATERIAL: PHOSPHOR BRONZE ALLOY
2) TERMINAL PLATING:
   "A" - HOT TIN DIP: .000040/0.00102 MIN. OVERALL
   "B" - .000015/0.00038 MIN. SELECT GOLD
   .000100/0.00254 MIN. SELECT TIN
   ALL OVER .000050/0.00127 MIN. NICKEL OVERALL.
   "C" - .000030/0.00076 MIN. SELECT GOLD
   .000100/0.00254 MIN. SELECT TIN
   ALL OVER .000050/0.00127 MIN. NICKEL OVERALL.
   PLATING FINISHES B AND C ARE POST PLATED.
3) PRODUCT SPECIFICATION: PS-43045, PS-43650, PS-44300-001.
4) PACKAGING SPECIFICATION: PK-43030-001 (REEL), PK-43030-003 (LOOSE).
5) TERMINAL FOR USE IN MICRO-FIT RECEPTACLE SERIES 43025, 43645, 44133, AND 46623. ONLY 20-24 AWG AND 26-30 AWG TERMINALS CAN BE USED IN TPA RECEPTACLE SERIES 171850 AND 172952.
6) FOR TERMINAL ORIENTATION IN RECEPTACLE SEE DRAWINGS FOR RECEPTACLES.
7) THIS TERMINAL IS DESIGNED IN METRIC.
8) MOLEX RECOMMENDS THE USE OF MICRO-FIT TEST PLUG (SERIES 44242) WHENEVER CONTINUITY TESTING IS PERFORMED. TEST PLUGS MUST NOT BE USED TO MAKE OR BREAK UNDER LOAD. MOLEX DOES NOT RECOMMEND USING STANDARD MATING COMPONENTS (SERIES 43020, 43045, 43640, 43650, OR 43031) FOR HARNESS TESTING PURPOSES.
9) TEXT ON PART IS FOR REFERENCE ONLY. TEXT AND TEXT LOCATION MAY VARY DEPENDING ON PART NUMBER AND/OR TOOL.
10) 18 AWG PART NUMBERS ARE DESIGNED FOR 18 AWG 1061 STYLE WIRE OR A .073/1.85 MAXIMUM INSULATION OUTSIDE DIAMETER.

THIS DRAWING CONTAINS INFORMATION THAT IS PROPRIETARY TO MOLEX ELECTRONIC TECHNOLOGIES, LLC AND SHOULD NOT BE USED WITHOUT WRITTEN PERMISSION

FUNCTIONAL SYMBOLS: FA = 0, FC = 0, FP = 0
DIVISIONAL SYMBOLS

DIMENSION UNITS: INCH/MM
SCALE: 10:1

GENERAL TOLERANCES (UNLESS SPECIFIED)

	MM	INCH
4 PLACES	±	±
3 PLACES	±	± 0.01
2 PLACES	± 0.25	± 0.014
1 PLACE	± 0.35	±
0 PLACES	±	±
ANGULAR TOL	± 0.5 °	

DRAFT WHERE APPLICABLE MUST REMAIN WITHIN DIMENSIONS

CURRENT REV DESC: CORRECT 3.52 DIMENSION

EC NO: 730513
DRWN: RICARC13 2022/10/28
CHK'D: MKIPPER 2022/12/01
APPR: XQZHANG 2023/05/04

INITIAL REVISION:
DRWN: MUELLER 2002/08/03
APPR: MARGULIS 2002/08/03

THIRD ANGLE PROJECTION | DRAWING: C-SIZE | SERIES: 43030

molex

MICRO-FIT (3.0) FEMALE CRIMP TERMINAL

PRODUCT CUSTOMER DRAWING

DOCUMENT NUMBER	DOC TYPE	DOC PART	REVISION
SD-43030-XXXX	PSD	001	N9

MATERIAL NUMBER	CUSTOMER	SHEET NUMBER
SEE TABLE	GENERAL MARKET	1 OF 1

DOCUMENT STATUS	P1	RELEASE DATE	2023/05/04 03:48:26

FORMAT: Eng-lega-master-lb-prod-C
REVISION: E1
DATE: 2021/05/01